USB SOLUTIONS

AT43USB380

USB 2.0 FULL SPEED OTG/ HOST/FUNCTION PROCESSOR

PLUG & PLAY ON-THE-GO SOLUTION FOR EMBEDDED APPLICATIONS

AT43USB380: THE BEAUTY OF SIMPLICITY

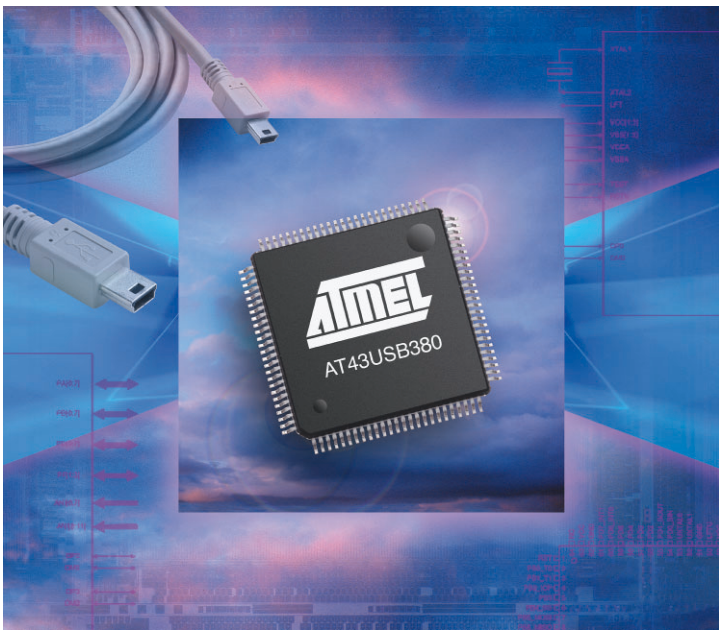

VISIT: *HTTP://WWW.ATMEL.COM/AD/PLUGPLAYOTG*

Atmel's AT43USB380 is an all-in-one USB solution designed specifically to hide the complexity of adding OTG/host functionality to embedded designs. It features:

- An intelligent OTG/host/function processor capable of managing USB transactions without system processor intervention
- A processor/RTOS independent software suite that includes standard USB class device drivers and simple Application Programming Interface (API) for custom driver development

With the AT43USB380, in-depth knowledge of USB protocol is no longer a prerequisite for your USB development.

HARDWARE BLOCKS

The AT43USB380 is a memory-mapped USB co-processor capable of managing USB transaction and data flow autonomously. Key AT43USB380 modules include:

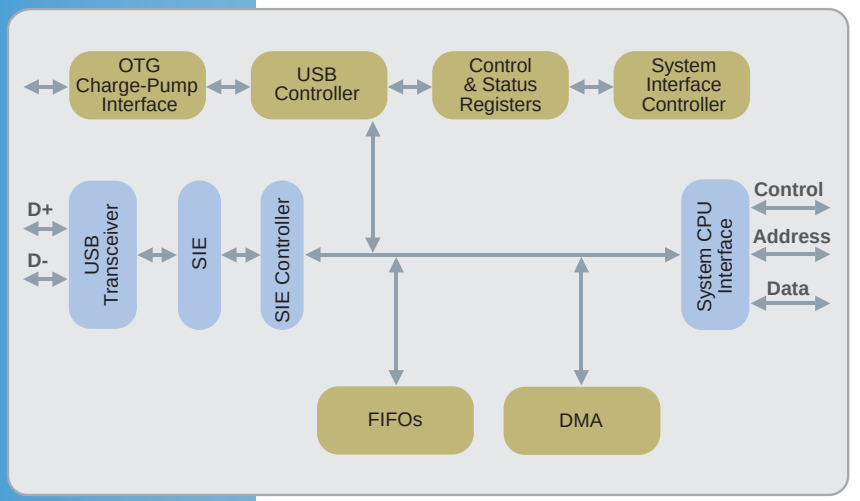

- **Dedicated controllers** handling USB protocol and data flow to and from the system processor
- **Full-speed host/function port**
- **OTG charge-pump interface** providing OTG physical signaling
- **Control and data FIFO blocks** with separate Rx and Tx buffering to ensure maximum throughput
- **32-/16-/8-bit system processor interface** with DMA capability

SOFTWARE ARCHITECTURE

USB application development is made easy with the tight integration of AT43USB380 hardware and software. The platform (processor/RTOS) independent AT43USB380 software suite features:

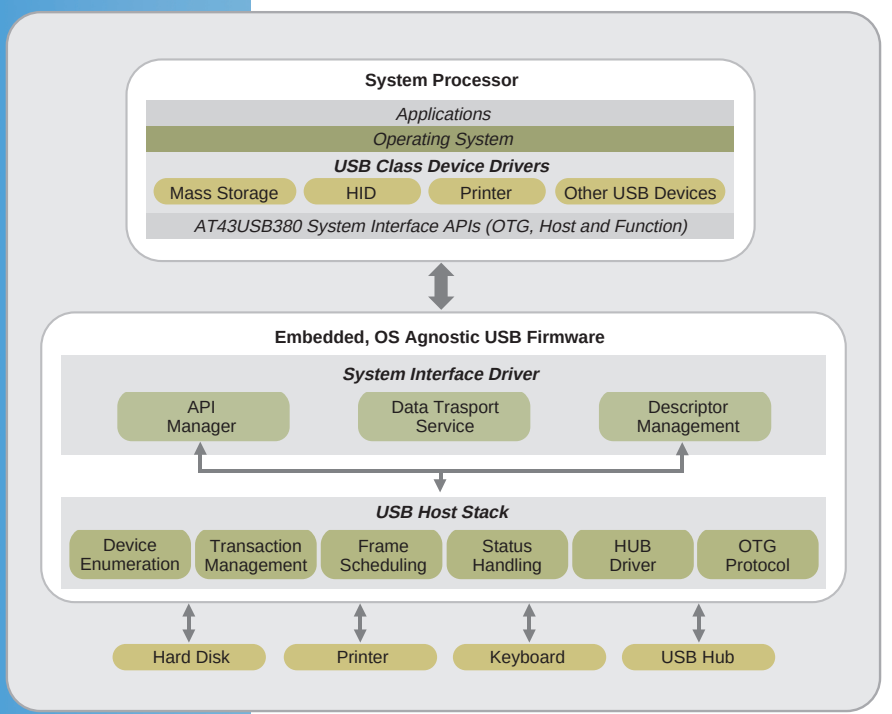

- **On-chip USB Firmware stack** comprised of USB host, function, hub and OTG (HNP and SRP) modules
- **ANSI C compliant system interface library APIs** that serve as the building blocks of USB device drivers
- **Standard USB class device drivers** presented to the system designers in the form of ANSI C compliant APIs

Flexible Hardware Design

Instant USB Point-to-Point Solution for Embedded Devices

- Three operating modes: OTG, standalone host and standalone function
- Configurable system bus interface suitable for 32-/16-/8-bit system processors
- Generic design compatible with any standard USB class and proprietary devices

Intelligent Architecture

Minimal Consumption of System Resource

- Enumeration without system processor intervention
- Automatic USB frame scheduling and transaction management without interrupts to the system processor
- High-speed DMA data transfer across system bus

Comprehensive Software Suite

No USB Expertise Required

- Standard USB class drivers
- Easy-to-use system APIs to build custom USB device drivers
- On-chip USB HUB driver

Minimal Custom Engineering

Fastest Time-to-Market

- No need to develop and port USB software
- No time wasted for compatibility testing with different classes of USB devices from different vendors

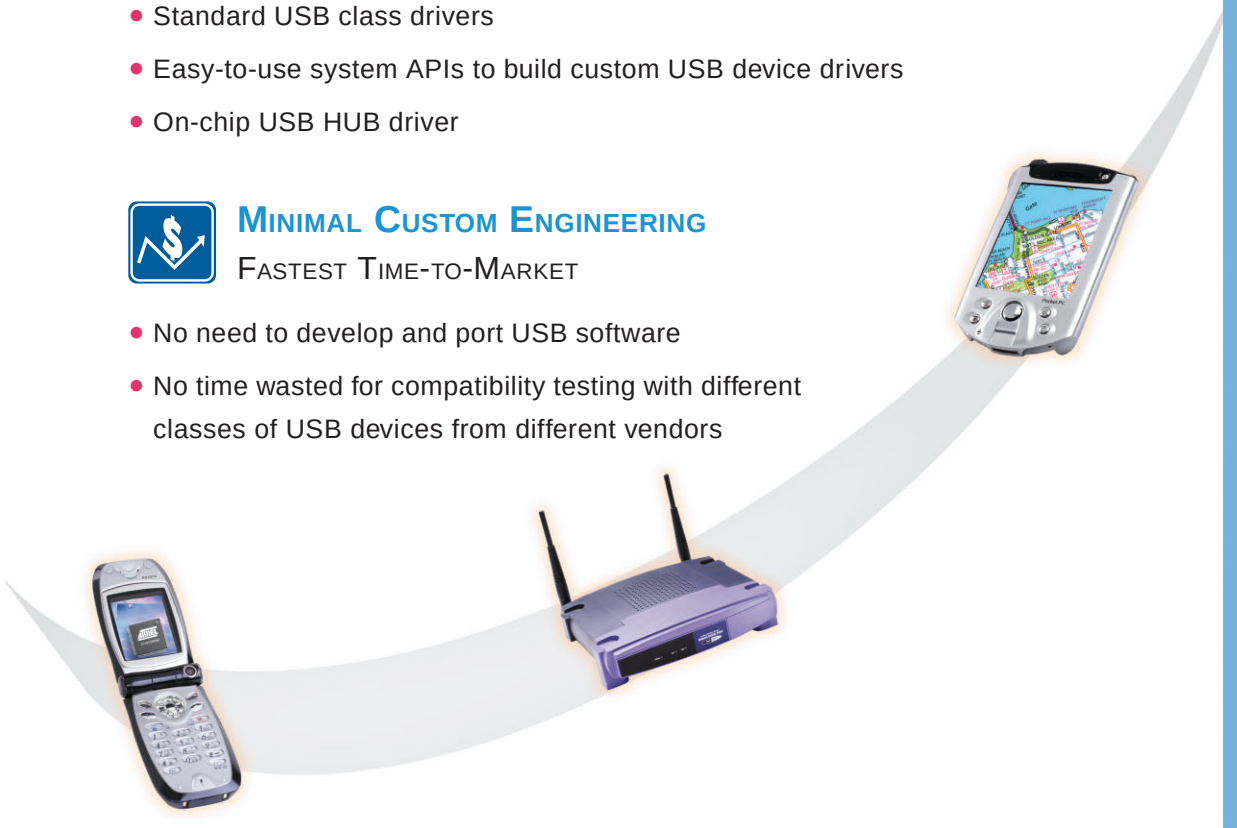

http://www.atmel.com/ad/plugplayotg

Atmel Corporation
2325 Orchard Parkway
San Jose, CA 95131, USA
Tel: 1(408) 441-0311
Fax: 1(408) 487-2600

Regional Headquarters

Europe
Atmel Sarl
Route des Arsenaux 41
Case Postale 80
CH-1705 Fribourg
Switzerland
Tel: (41) 26-426-5555
Fax: (41) 26-426-5500

Asia
Room 1219
Chinachem Golden Plaza
77 Mody Road Tsimshatsui
East Kowloon
Hong Kong
Tel: (852) 2721-9778
Fax: (852) 2722-1369

Japan
9F, Tonetsu Shinkawa Bldg.
1-24-8 Shinkawa
Chuo-ku, Tokyo 104-0033
Japan
Tel: (81) 3-3523-3551
Fax: (81) 3-3523-7581

Literature Requests
www.atmel.com/literature

DEVELOPMENT KIT

The AT43DK380 is a complete starter kit and development system for the AT43USB380 OTG/host/function processor.

AT43DK380 DEVELOPMENT KIT FEATURES

- AT43USB380 reference design board
  - OTG/host/function processor
  - 1 Mbyte Flash ROM expandable to 2 Mbytes
  - 2 Mbytes static RAM
  - 4-Port USB full-/low-speed hub
  - OTG charge-pump and voltage comparator
  - USB type A, mini A/B ports
  - 20-pin JTAG interface connector
  - Expansion connector to support 32-/16-/8-bit system processor
- System processor daughter cards
- USB software suite
  - USB stack
  - System library API set
  - Standard USB class drivers
- USB clinic diagnostic and debugging tool

TYPICAL SYSTEM PROCESSOR CONNECTION

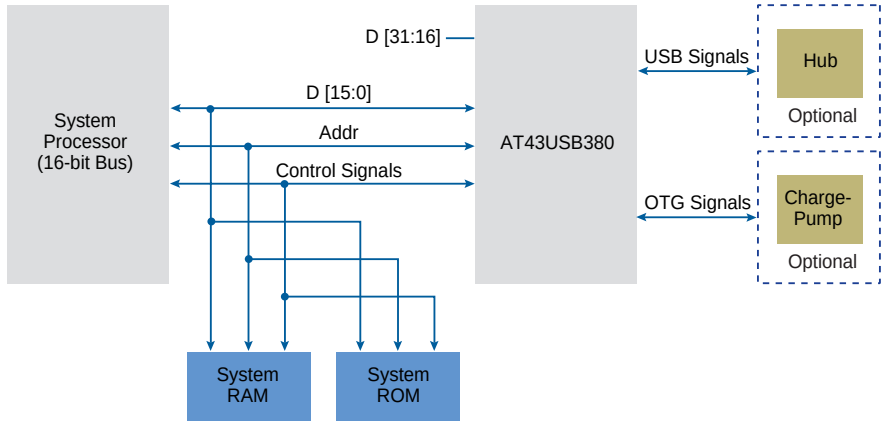

©Atmel Corporation 2004. All rights reserved. Atmel® and combinations thereof are the registered trademarks of Atmel Corporation or its subsidiaries. Other terms and product names may be the trademarks of others.

3452A–USB–3/04/10M