THIS COPY IS PROVIDED ON A RESTRICTED BASIS AND IS NOT TO BE USED IN ANY WAY DETRIMENTAL TO THE INTERESTS OF PANDUIT CORP.

PANDUIT PART NUMBER	WEIGHT
FR6LB	1.37 LB/EACH (621g/EACH)

C NOTES:

1. SEE CURRENT CATALOG FOR ADDITIONAL PART SUFFIXES TO INDICATE PACKAGE QUANTITY.
2. THE FIBERRUNNER 6x4 QUIKLOCK WALL MOUNT "L" BRACKET IS USED TO SUPPORT THE FIBERRUNNER 4x4 AND/OR 6x4 CABLE ROUTING SYSTEMS FROM ANY FLAT SURFACE SUITABLE TO CARRY THE WEIGHT OF THE PATHWAY. NOTE THAT THE MOUNTING IS NOT INCLUDED AND WILL NEED TO BE SUPPLIED BY THE INSTALLER/END USER.
3. THE FIBERRUNNER 6x4 QUIKLOCK WALL MOUNT "L" BRACKET INCLUDES:
   ONE (1) BRACKET ASSEMBLY
4. FINISH COLOR: BLACK
5. DIMENSIONS IN PARENTHESIS ARE IN METRIC.

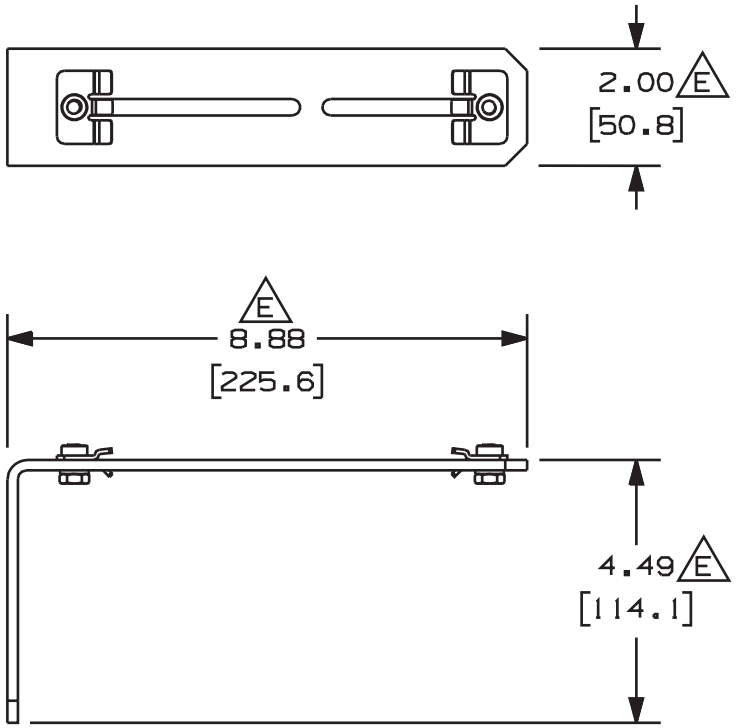

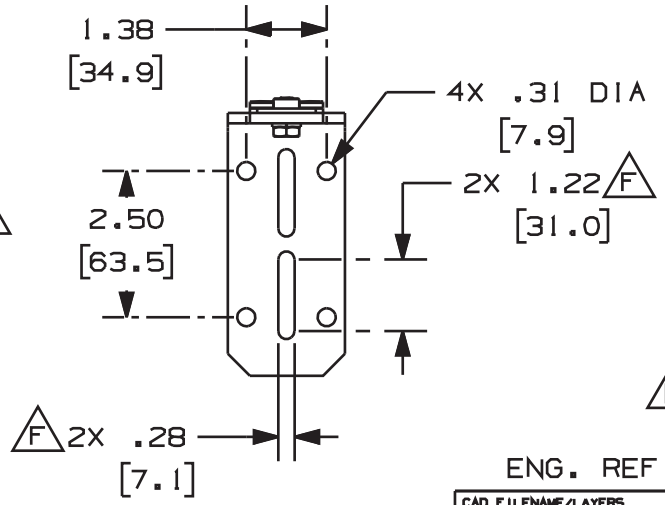

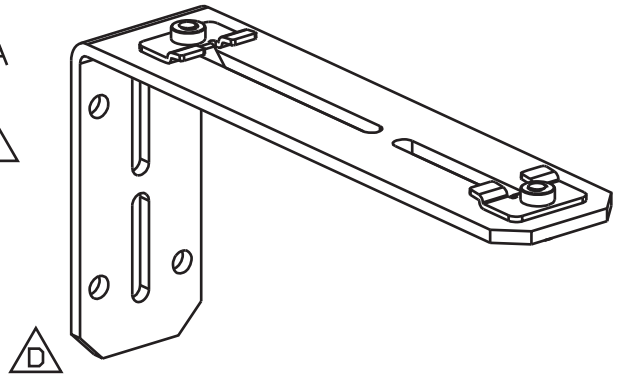

ENG. REF.: D37585BE_DC_FR6LB_01A.prt

CAD FILENAME/LAYERS A FR6LB.pdf

PANDUIT CORP TINLEY PARK, ILLINOIS

FIBERRUNNER 6x4 QUIKLOCK WALL MOUNT "L" BRACKET (FR6LB)
B CUSTOMER DRAWING

UNLESS OTHERWISE SPECIFIED, DIMENSIONAL TOLERANCES ARE:
(.X) ± (.XXX) ±
(.XX) ±.03 (.8) ANGLES ±

UNLESS OTHERWISE SPECIFIED, ALL DIMENSIONS ARE GIVEN IN INCHES, THIRD ANGLE PROJECTION.

DRAWN BY MSO
DATE 5-11-00
CHK'D CVV
MAT'L: STEEL
SCALE NONE
DRAWING NO. 37585-22
DWG A
SIZE

REV	DATE	BY	CHK	DESCRIPTION	ECN	R	CUST	SUP	GMBH
-	--------	---	---	F. REVISED DIMENSION. E. REV'D DIMENSION LOCATION.	--------	--	--		
-	--------	---	---	D. REVISED PART GEOMETRY. C. REVISED GENERAL NOTES.	--------	--	--		
1	3-23-05	MSO	RPA	B. REVISED DRAWING TITLE. A. REVISED CAD FILENAME.	37585-22	RN	RN		
R	5-11-00	MSO	CVV	RELEASED TO PRODUCTION	37585-22	HIW	HIW		