Driver Specification Sheet

Peerless by TYMPHANY

Model No: NE265W-08

Product Line: Tymphany

Rev: 1

Last Update: 2017-04-21 12:39:42

Product Description

This 10 inch 8 ohm member of the NE family has leading-edge transducer technology packaged in a cutting edge, stylistic design. The subwoofers in this family feature an innovative cast aluminium basket design which minimizes acoustic reflections inside the driver, through large basket windows and sculpted basket spokes. The basket also is designed to act as a highly coupled heat sink to the NdFeB motor, so as to improve power handling capacity. An additional heat sink is available to provide extra thermal protection if needed. The cone and dust cap are constructed of natural wood fiber material with proprietary coating formulas & processes, so as to yield high clarity products. The cone designs also utilize pentacone technology for improved frequency response. The voice coil bobbin is titanium, for improved performance. The FEA-designed motor features copper caps to minimize inductance and extend performance to high frequencies. Rounding out the design is a 4-way terminal block connector, for ease of electrical connection.

Mechanical Drawing

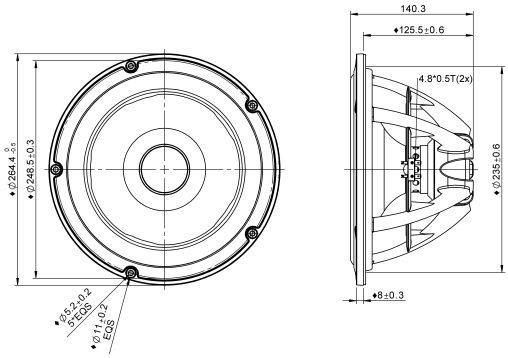

Specifications

DC Resistance	Revc	Ohms	6.24	5.0%	Energy Bandwidth Product	EBP	(1/Qes)*fs	
Minimum Impedance	Zmin	Ohms	8.03	7.5%	Moving Mass	Mms	g	74.1
Voice Coil Inductance	Le	mH	0.53		Suspension Compliance	Cms	um/N	647.9
Resonant Frequency	Fs	Hz	22.97	15%	Effective Cone diameter	D	cm	20.4
Mechanical Q Factor	Qms		10.33		Effective Piston Area	Sd	cm^2	326.9
Electrical Q Factor	Qes	0.31			Effective Volume	Vas	L	97.21
Total Q Factor	Qts		0.3		Motor Force Factor	BL	Tm	14.7
Ratio Fs/Qts	F	Fs/Qts	76.57		Motor Efficiency Factor	ß	(T*M^2)/Ohms	34.6
Half Space Sensitivity @2.83V	db@2.83V/1M	dB	85.08	+/- 1.0db	Voice coil former Material	VCfm		TiSV
Half Space Sensitivity @1W/1M	db@1W/1M	dB	85.1	+/- 1.0db	Voice coil inner diameter	VCd	mm	51.32
Gap Height	Gh	mm	8		Rated Noise Power	P	W	190
Maximum Linear Excursion	Xmax	mm	9.4		Test Spectrum Bandwidth	20Hz - 2kHz		
Ferrofluid Type	FF				Driver Size	Inch	10 in	
Driver Mass	Kg	2.27						

Frequency and Impedance Response

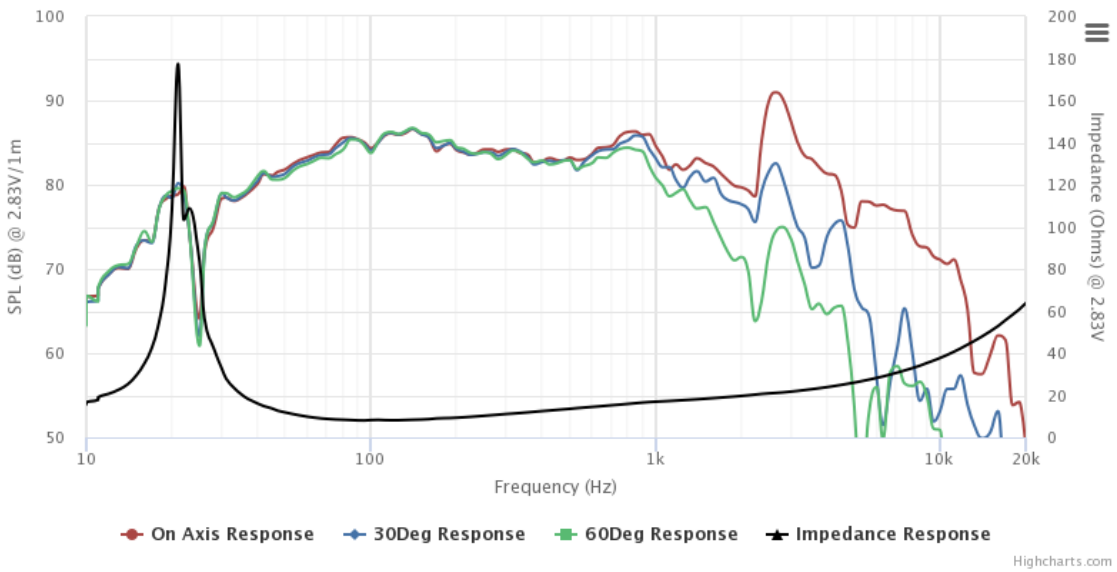

Tymphany HK LTD
Address : Room 1307-8 Dominion Centre, 43-59 Queens Rd East, Wanchai, Hong Kong
E-mail: sales@tymphany.com